INSTALLATION INSTRUCTIONS & PARTS LIST

STERLING GAS FIRED PROPELLER UNIT HEATERS

ATTENTION: READ THIS MANUAL AND ALL LABELS ATTACHED TO THE UNIT CAREFULLY BEFORE ATTEMPTING TO INSTALL, OPERATE OR SERVICE THESE UNITS! CHECK UNIT DATA PLATE FOR TYPE OF GAS AND ELECTRICAL SPECIFICATIONS AND MAKE CERTAIN THAT THESE AGREE WITH THOSE AT POINT OF INSTALLATION. RECORD THE UNIT MODEL AND SERIAL No.(s) IN THE SPACE PROVIDED. RETAIN FOR FUTURE REFERENCE.

Model No. _____ Serial No. _____

FOR YOUR SAFETY

The use and storage of gasoline or other flammable vapors and liquids in open containers in the vicinity of this appliance is hazardous.

FOR YOUR SAFETY

If you smell gas:
1. Open windows.
2. Don't touch electrical switches.
3. Extinguish any open flame.
4. Immediately call your gas supplier.

⚠ WARNING Improper installation, adjustment, alteration, service or maintenance can cause property damage, injury or death. Read the installation, operating and maintenance instructions thoroughly before installing or servicing this equipment.

APPROVED FOR USE IN CALIFORNIA WHEN EQUIPPED WITH SPARK IGNITION.

⚠ WARNING Install, operate and maintain unit in accordance with manufacturer's instructions to avoid exposure to fuel substances or substances from incomplete combustion which can cause death or serious illness. The state of California has determined that these substances may cause cancer, birth defects, or other reproductive harm.

INSTALLER'S RESPONSIBILITY

Installer Please Note: This equipment has been test fired and inspected. It has been shipped free from defects from our factory. However, during shipment and installation, problems such as loose wires, leaks or loose fasteners may occur. **It is the installer's responsibility to inspect and correct any problems that may be found.**

RECEIVING INSTRUCTIONS

Inspect shipment immediately when received to determine if any damage has occurred to the unit during shipment. After the unit has been uncrated, check for any visible damage to the unit. If any damage is found, the consignee should sign the bill of lading indicating such damage and immediately file claim for damage with the transportation company.

STERLING® HVAC PRODUCTS
260 NORTH ELM ST., WESTFIELD, MA 01085
TEL: (413) 564-5540 FAX: (413) 562-5311
www.sterlinghvac.com A MESTEK COMPANY

MODELS: QVF (30, 45, 60, 75, 100, 125, 150, 175, 200, 225, 250, 300, 350, 400) (S,M)

TABLE OF CONTENTS

SPECIFICATIONS
- Basic Description 2
- Performance & Specification Data 4

SAFETY INFORMATION
- Installation Codes 2, 3
- Special Precautions 2, 3

INSTALLATION
- Locating Units 3
- Proper Clearances 3, 5, 6
- Combustion Air 6
- Suspension of Units 5, 6
- Gas Supply Piping 7
- Pipe Installation 8

VENTING 9

ELECTRICAL CONNECTIONS 10

EXPLANATION OF CONTROLS/OPERATION
- Standing Pilot 11, 12
- Spark Ignition 13, 14
- Main Burner Orifice Schedule 15
- Adjustments 15, 16

MAINTENANCE
- Servicing & Cleaning 16

IDENTIFICATION OF PARTS 17

TROUBLESHOOTING GUIDE 18, 19, 20, 21

REPLACEMENT PARTS 22

WARRANTY 22

INSPECTION SHEET 23

NOTICE: It is the owner's responsibility to provide any scaffolding or other apparatus required to perform emergency service or annual/periodic maintenance to this equipment.

DESCRIPTION

The gas unit heater is a factory assembled, low static pressure type propeller fan heater designed to be suspended within the space to be heated. THESE HEATERS ARE NOT TO BE CONNECTED TO DUCTWORK. The designs are certified by CSA International as providing a minimum of 80% thermal efficiency, and approved for use in California when equipped with spark ignition. **Do not alter these units in any way.** If you have any questions after reading this manual, contact the manufacturer.

Figure 1

PROPELLER UNIT HEATER

Front View

Rear View

See Identification of Parts section for unit components.

The following terms are used throughout this manual, in addition to CSA International requirements, to bring attention to the presence of potential hazards or to important information concerning the product:

⚠ DANGER Indicates an imminently hazardous situation which, if not avoided, will result in death, serious injury or substantial property damage.

⚠ WARNING Indicates an imminently hazardous situation which, if not avoided, could result in death, serious injury or substantial property damage.

⚠ CAUTION Indicates an imminently hazardous situation which, if not avoided, may result in minor injury or property damage.

NOTICE: Used to notify of special instructions on installation, operation or maintenance which are important to equipment but not related to personal injury hazards.

GENERAL SAFETY INFORMATION

⚠ WARNING Failure to comply with the general safety information may result in extensive property damage, severe personal injury or death.

⚠ WARNING This product must be installed by a licensed plumber or gas fitter when installed within the Commonwealth of Massachusetts.

Installation must be made in accordance with local codes, or in absence of local codes, with the latest edition of ANSI Standard Z223.1 (N.F.P.A. No. 54) National Fuel Gas Code. All of the ANSI and NFPA Standards referred to in these installation instructions are those that were applicable at the time the design of this appliance was certified. The ANSI Standards are available from the American National Standards Institute, Inc., 11 West 42nd Street, New York, NY 10036 or www.ansi.org. The NFPA Standards are available from the National Fire Protection Association, Batterymarch Park, Quincy, MA 02269. These unit heaters are designed for use in airplane hangars when installed in accordance with ANSI/NFPA No. 409 and in public garages when installed in accordance with NFPA No. 88A and NFPA No. 88B.

If installed in Canada, the installation must conform with local building codes, or in absence of local building codes, with CGA-B149.1 "Installation Codes for Natural Gas Burning Appliances and Equipment" or CGA-B149.2 "Installation Codes for Propane Gas Burning Appliances and Equipment". These unit heaters have been designed and certified to comply with CGA 2.6. Also see sections on installation in AIRCRAFT HANGARS and PUBLIC GARAGES.

⚠ WARNING Do not alter the unit heater in any way or damage to the unit and/or severe personal injury or death may occur!

⚠ WARNING Disconnect all power and gas supplies before installing or servicing the heater. If the power disconnect is out of sight, lock it in the open position and tag it to prevent unexpected application of power. Failure to do so could result in fatal electric shock, or severe personal injury.

⚠ CAUTION Insure that all power sources conform to the requirements of the unit heater or damage to the unit will result!

Follow installation instructions CAREFULLY to avoid creating unsafe conditions. All external wiring must conform to applicable current local codes, and to the latest edition of the National Electric Code ANSI/NFPA No. 70. In Canada, all external wiring must conform to the Canadian Electric Code, Part 1 CSA Standard C22.1. All wiring should be done and checked by a qualified electrician, using copper wire only. All gas connections should be made and leak-tested by a suitably qualified individual, per instructions in this manual.

Use only the fuel for which the heater is designed (see rating plate). Using LP gas in a heater that requires natural gas, or vice versa, will create the risk of gas leaks, carbon monoxide poisoning and explosion.

⚠ WARNING Do not attempt to convert the heater for use with a fuel other than the one intended. Such conversion is dangerous, as it will create the risks listed previously.

Make certain that the power source conforms to the electrical requirements of the heater.

⚠ WARNING Do not depend upon a thermostat or other switch as sole means of disconnecting power when installing or servicing heater. Always disconnect power at main circuit breaker as described above. Failure to do so could result in fatal electric shock.

Special attention must be given to any grounding information pertaining to this heater. To prevent the risk of electrocution, the heater must be securely and adequately grounded. This should be accomplished by connecting a grounded conductor between the service panel and the heater. To ensure a proper ground, the grounding means must be tested by a qualified electrician.

Do not insert fingers or foreign objects into the heater or its air moving device. Do not block or tamper with the heater in any manner while in operation or just after it has been turned off, as some parts may be hot enough to cause injury.

This heater is intended for general heating applications ONLY. It must NOT be used in potentially dangerous locations such as flammable, explosive, chemical-laden or wet atmospheres.

Do not attach ductwork to this product or use it as a makeup air heater. Such usage voids the warranty and will create unsafe operation.

In cases in which property damage may result from malfunction of the heater, a backup system or a temperature sensitive alarm should be used.

⚠ CAUTION The open end of piping systems being purged shall not discharge into areas where there are sources of ignition or into confined spaces UNLESS precautions are taken as follows: (1) By ventilation of the space, (2) control of purging rate, (3) elimination of all hazardous conditions. All precautions must be taken to perform this operation in a safe manner!

Unless otherwise specified, the following conversions may be used for calculating SI unit measurements:

1 gallon = 3.785 L	liter/second = CFM x 0.472
1 foot = 0.305 m	meter/second = FPM ÷ 196.8
1 inch = 25.4 mm	1000 Btu per hour = 0.293 kW
1 psig = 6.894 kPa	1000 Btu/Cu. Ft. = 37.5 MJ/m^3
1 pound = 0.453 kg	1 inch water column = 0.249 kPa
	1 cubic foot = 0.028 m^3

Table 1 - STANDARD PROPELLER TYPE UNIT HEATERS

Unit Size	30	45	60	75	100	125	150	175	200	225	250	300	350	400
PERFORMANCE DATA														
Input (BTU/Hr) *	30,000	45,000	60,000	75,000	100,000	125,000	150,000	175,000	200,000	225,000	250,000	300,000	350,000	400,000
(kW)	(8.8)	(13.2)	(17.6)	(22.0)	(29.3)	(36.6)	(43.9)	(51.2)	(58.6)	(65.9)	(73.2)	(87.8)	(102.5)	(117.1)
Output (BTU/Hr)	24,300	36,450	48,600	60,750	80,000	100,000	120,000	140,000	160,000	180,000	200,000	240,000	280,000	320,000
(kW)	(7.1)	(10.7)	(14.2)	(17.8)	(23.4)	(29.3)	(35.1)	(41.0)	(46.9)	(52.7)	(58.6)	(70.3)	(82.0)	(93.7)
Thermal Efficiency %	81	81	81	81	80	80	80	80	80	80	80	80	80	80
Free Air Delivery (CFM)	700	800	1050	1100	1480	1650	2200	2530	2640	2700	3100	4400	5000	5300
(cu. m/s)	(0.330)	(0.378)	(0.496)	(0.519)	(0.699)	(0.779)	(1.038)	(1.194)	(1.246)	(1.274)	(1.463)	(2.077)	(2.360)	(2.502)
Air Temperature Rise (F Deg.)	30	42	42	50	50	56	50	51	56	61	60	50	52	56
(C Deg.)	(17)	(23)	(23)	(28)	(28)	(31)	(28)	(28)	(31)	(34)	(33)	(28)	(29)	(31)
Outlet Velocity (FPM)	700	750	640	672	950	900	1045	1070	1000	950	980	1100	1150	1050
(m/s)	(3.6)	(3.8)	(3.3)	(3.4)	(4.8)	(4.6)	(5.3)	(5.4)	(5.1)	(4.8)	(5.0)	(5.6)	(5.8)	(5.3)
Full Load Amps at 115V **	2.1	2.1	2.1	2.1	3.4	3.6	4.8	5.8	5.8	5.8	5.8	8.8	10.8	10.8
MOTOR DATA : Motor HP	1/30	1/30	1/30	1/30	1/20	1/10	1/4	1/3	1/3	1/3	1/3	2@1/4	2@1/3	2@1/3
Motor kW	(0.025)	(0.025)	(0.025)	(0.025)	(0.037)	(0.075)	(0.186)	(0.249)	(0.249)	(0.249)	(0.249)	(0.186)	(0.249)	(0.249)
Motor Type***	SP	SP	SP	SP	SP	SP	PSC	PSC	PSC	PSC	PSC	PSC	PSC	PSC
R.P.M.	1,050	1,050	1,050	1,050	1,050	1,050	1,140	1,140	1,140	1,140	1,140	1,140	1,140	1,140
Amps @ 115V	1.3	1.3	1.3	1.3	2.6	2.8	4.0	4.5	4.5	4.5	4.5	8.0	9.0	9.0
DIMENSIONAL DATA in.(mm)														
"A" Height to Top of Unit	25-3/4	25-3/4	25-3/4	25-3/4	31-1/4	31-1/4	36-1/4	36-1/4	36-1/4	36-1/4	36-1/4	36-1/4	36-1/4	36-1/4
	(654)	(654)	(654)	(654)	(794)	(794)	(921)	(921)	(921)	(921)	(921)	(921)	(921)	(921)
"B" Width of Unit	14	14	17-1/2	17-1/2	17-7/8	20-5/8	20-5/8	23-3/8	26-1/8	28-7/8	31-5/8	37-1/8	42-5/8	48-1/8
	(356)	(356)	(444)	(444)	(454)	(524)	(524)	(594)	(664)	(733)	(803)	(943)	(1083)	(1222)
"C" Height to Top of Hanger	27-1/2	27-1/2	27-1/2	27-1/2	33-1/4	33-1/4	38-1/4	38-1/4	38-1/4	39-1/8	39-1/8	39-1/8	39-1/8	39-1/8
	(698)	(698)	(698)	(698)	(845)	(845)	(972)	(972)	(972)	(994)	(994)	(994)	(994)	(994)
"D" Depth to Rear of Housing	27-5/8	27-5/8	27-5/8	27-5/8	32-1/2	32-1/2	36	36	36	38-1/4	38-1/4	37-3/4	38-1/4	38-1/4
	(702)	(702)	(702)	(702)	(826)	(826)	(914)	(914)	(914)	(972)	(972)	(959)	(972)	(972)
"E" Hanging Distance Width	8-5/8	8-5/8	14-1/8	14-1/8	14-3/4	17-1/2	17-1/2	20-1/4	23	25-1/2	28-1/4	33-3/4	39-1/4	44-3/4
	(219)	(219)	(359)	(359)	(375)	(444)	(444)	(514)	(584)	(648)	(718)	(857)	(997)	(1137)
"F" Discharge Opening Width	10	10	15-1/2	15-1/2	15-3/8	18-1/8	18-1/8	20-7/8	23-5/8	26-3/8	29-1/8	34-5/8	40-1/8	45-5/8
	(254)	(254)	(394)	(394)	(391)	(460)	(460)	(530)	(600)	(670)	(740)	(879)	(1019)	(1159)
"G" Depth to Unit Side Jacket	19-3/8	19-3/8	19-3/8	19-3/8	26-3/4	26-3/4	26-3/4	26-3/4	26-3/4	26-3/4	26-3/4	26-3/4	26-3/4	26-3/4
	(492)	(492)	(492)	(492)	(679)	(679)	(679)	(679)	(679)	(679)	(679)	(679)	(679)	(679)
"H" Discharge Opening Height	16-1/4	16-1/4	16-1/4	16-1/4	18	18	18	18	18	18	18	18	18	18
	(413)	(413)	(413)	(413)	(457)	(457)	(457)	(457)	(457)	(457)	(457)	(457)	(457)	(457)
"L" Hanger Location	11-7/8	11-7/8	11-1/2	11-1/2	15-1/8	15-1/8	15-1/8	15-1/8	15-1/8	16-1/4	16-1/4	16-1/4	16-1/4	16-1/4
	(302)	(302)	(292)	(292)	(384)	(384)	(384)	(384)	(384)	(413)	(413)	(413)	(413)	(413)
"S" Flue Size (Dia-in.)	4	4	5	5	6	6	7	7	8	8	8	10	10	12▲
(Dia-mm)	(102)	(102)	(127)	(127)	(152)	(152)	(178)	(178)	(203)	(203)	(203)	(254)	(254)	(305)
Flue Type ***	R,V	R,V	R,V	R,V	R,V	R,V	R,H	R,H	R,H	R,H	R,H	OV,H	OV,H	OV,H
Fan Diameter (in.)	12	12	14	14	14	16	16	18	18	18	18	2@16	2@18	2@18
Gas Inlet-Natural Gas (in.)	1/2	1/2	1/2	1/2	1/2	1/2	1/2	1/2	1/2	3/4	3/4	3/4	3/4	3/4
Gas Inlet- LP Gas (in.)	1/2	1/2	1/2	1/2	1/2	1/2	1/2	1/2	1/2	←		1/2 OR 3/4		→
Approx. Shipping Wt. (lb.)	72	82	98	104	178	200	209	232	242	279	301	356	415	451
(kg)	(33)	(37)	(44)	(47)	(81)	(91)	(95)	(105)	(110)	(127)	(137)	(161)	(188)	(205)
Net Unit Weight (lb.)	59	69	84	90	148	168	175	196	216	239	261	304	340	376
(kg)	(27)	(31)	(38)	(41)	(67)	(76)	(79)	(89)	(98)	(108)	(118)	(138)	(154)	(171)

* Ratings shown are for unit installations at elevations between 0 and 2,000 ft. (610m). For unit installations in U.S.A. above 2,000 ft. (610m), the unit input must be derated 4% for each 1,000 ft. (305m) above sea level; refer to local codes, or in absence of local codes, refer to the latest edition of the National Fuel Gas Code, ANSI Standard Z223.1 (N.F.P.A. No. 54).

* For installations in Canada, any reference to deration in excess of 2,000 ft. (610m) are to be ignored. At altitudes of 2,000 to 4,500 ft. (610 to 1372m), the unit must be derated to 90% of the normal altitude rating, and be so marked in accordance with the CSA certification.

** These amps are based on standing pilot units.

*** R = Round; OV = Oval; H = Horizontal; SP = Shaded Pole; PSC = Permanent Split Capacitor.

▲ See special details below for 400 venting.

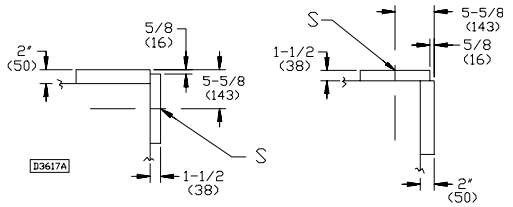

▲ 400 VENT HORIZONTAL

▲ "ALTERNATE" 400 VENT VERTICAL

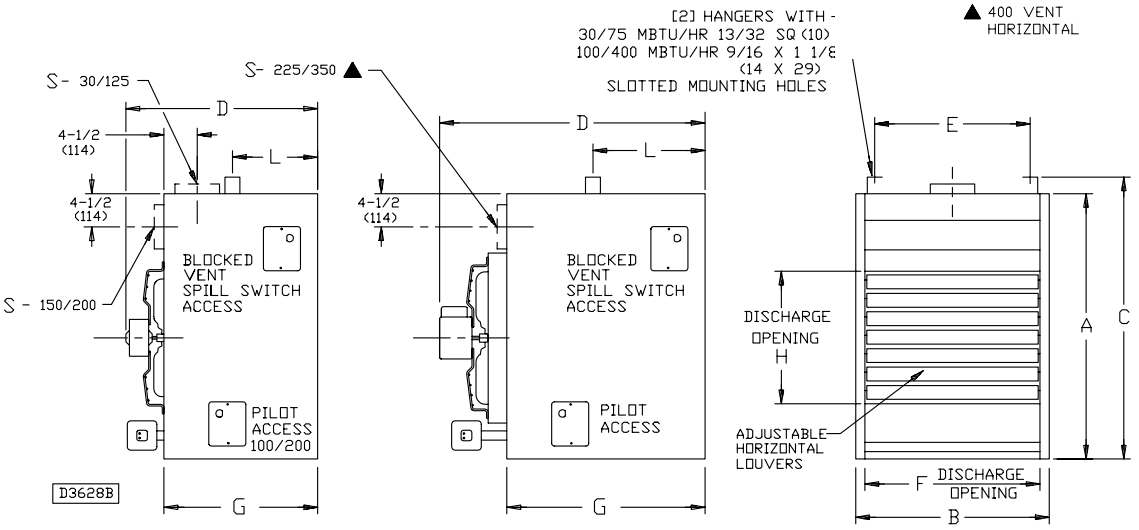

DIMENSIONS XX" STANDARD UNITS
DIMENSIONS IN PARENTHESIS (XX) MILLIMETERS

Figure 1A

INSTALLATION

⚠WARNING Do not install unit heaters in corrosive or flammable atmospheres! Premature failure of, or severe damage to the unit will result!

⚠WARNING Avoid locations where extreme drafts can affect burner operation. Unit heaters must not be installed in locations where air for combustion would contain chlorinated, halogenated or acidic vapors. If located in such an environment, premature failure of the unit will occur!

When the unit is equipped with an automatic gas ignition system, the unit heater must be installed such that the gas ignition control system is not directly exposed to water spray, rain or dripping water.

NOTICE: Location of unit heaters is related directly to the selection of sizes (see Figure 2). Basic rules are as follows:

Figure 2 - Heater Location

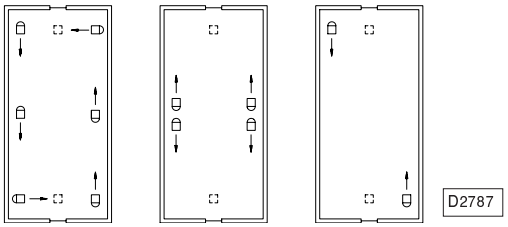

MOUNTING HEIGHT: Unit Heaters must be installed at a minimum of 8 feet (2.4m) above the floor, measured to the bottom of the unit. At heights above 8 feet (2.4m), less efficient air distribution will result. Occasionally unit heaters must be mounted at heights of 12 to 16 feet (3.7 to 4.9m) in order to clear obstacles. When this is the case, it is advisable to use centrifugal blower unit heaters.

AIRCRAFT HANGARS: Unit Heaters must be installed in aircraft hangars and public garages as follows: In aircraft hangars, unit heaters must be at least 10 feet (3.1m) above the upper surface of wings or engine enclosures of the highest aircraft to be stored in the hangar and 8 feet (2.4m) above the floor in shops, offices and other sections of the hangar where aircraft are not stored or housed. Refer to current ANSI/NFPA No. 409, Aircraft Hangars. In Canada, installation is suitable in aircraft hangars when acceptable to the enforcing authorities.

PUBLIC GARAGES: In repair garages, unit heaters must be at least 8 feet (2.4m) above the floor. Refer to the latest edition of NFPA No. 88B, Repair Garages.

In parking structures, unit heaters must be installed so that the burner flames are located a minimum of 18 inches (457mm) above the floor or protected by a partition not less than 18 inches (457mm) high. However, any unit heater mounted in a parking structure less than 8 ft. (2.4m) above the floor must be equipped with an OSHA approved fan guard. Refer to the latest edition of NFPA 88A, Parking Structures.

In Canada, installation must be in accordance to the latest edition of CGA-B149 “Installation Codes for Gas Burning Appliances and Equipment.”

AIR DISTRIBUTION: Direct air towards areas of maximum heat loss. When multiple heaters are involved, circulation of air around the perimeter is recommended where heated air flows along exposed walls. Satisfactory results can also be obtained where multiple heaters are located toward the center of the area with heated air directed toward the outside walls. Be careful to avoid all obstacles and obstructions which could impede the warm air distribution patterns. Heat throw distances are presented in Figure 2 and Table 2.

Figure 2A - Heat Throw Distances

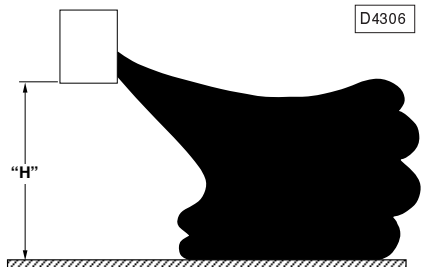

Table 2 - Standard Applications - Heat Throw Distances (Approximate) (see Figure 2A)

UNIT SIZE BTU/Hr (kW)

“H” ft. (m)	30,000 (8.8)	45,000 (13.2)	60,000 (17.6)	75,000 (22.0)	100,000 (29.3)	125,000 (36.6)	150,000 (43.9)	175,000 (51.2)	200,000 (58.6)	225,000 (65.9)	250,000 (73.2)	300,000 (87.8)	350,000 (102.5)	400,000 (117.1)
8 (2.4)	33 (10.1)	33 (10.1)	33 (10.1)	40 (12.2)	60 (18.3)	65 (19.8)	70 (21.3)	75 (22.9)	80 (24.4)	85 (25.9)	90 (27.4)	105 (32.0)	110 (33.5)	120 (36.6)
10 (3.0)	28 (8.5)	28 (8.5)	28 (8.5)	35 (10.7)	54 (16.5)	56 (17.1)	60 (18.3)	64 (19.5)	68 (20.7)	72 (21.9)	78 (23.8)	90 (27.4)	95 (29.0)	100 (30.5)
12 (3.7)	NR	NR	NR	NR	44 (13.4)	46 (14.0)	49 (20.7)	57 (17.4)	61 (18.6)	65 (19.8)	68 (20.7)	80 (24.4)	84 (25.6)	90 (27.4)
15 (4.6)	NR	NR	NR	NR	NR	NR	45 (22.6)	49 (14.9)	52 (15.8)	56 (17.1)	60 (18.3)	70 (21.3)	74 (22.6)	80 (24.4)
20 (6.1)	NR	NR	NR	NR	NR	NR	NR	NR	46 (14.0)	50 (15.2)	54 (16.5)	63 (19.2)	66 (20.1)	70 (21.3)

NR = Not recommended H = Distance from floor to bottom of the unit.

The installation is to be adjusted to obtain an air throughput within the range specified on the rating plate.

Unit heaters should not be installed to maintain low temperatures and/or freeze protection of buildings. A minimum of 50°F (10°C) thermostat setting must be maintained. If unit heaters are operated to maintain lower than 50°F (10°C), hot flue gases are cooled inside the heat exchanger to a point where water vapor (a flue gas by-product) condenses onto the heat exchanger walls. The result is a mildly corrosive acid that prematurely corrodes the aluminized heat exchanger and can actually drip water down from the unit heater onto floor surface. Additional unit heaters should be installed if a minimum 50°F (10°C) thermostat setting cannot be maintained.

AIR FOR COMBUSTION: The Unit Heater shall be installed in a location in which the facilities for ventilation permit satisfactory combustion of gas, proper venting, and the maintenance of ambient temperature at safe limits under normal conditions of use. The Unit Heater shall be located in such a manner as not to interfere with proper circulation of air within the confined space. When buildings are so tight that normal infiltration does not meet air requirements, outside air shall be introduced per Sections 1.3.4.2 and 1.3.4.3 of ANSI Z223.1 for combustion requirements. A permanent opening or openings having a total free area of not less than one square inch per 5,000 BTU/HR. (1.5 Kw) of total input rating of all appliances within the space shall be provided.

NOTICE: Unit heater sizing should be based on heat loss calculations where the unit heater output equals or exceeds heat loss.

CLEARANCES: Each Gas Unit Heater shall be located with respect to building construction and other equipment so as to permit access to the Unit Heater. Clearance between walls and the vertical sides of the Unit Heater shall be no less than 18 inches (457mm). A minimum clearance of 6 inches (152mm) must be maintained between the top of the Unit Heater and the ceiling. The bottom of the Unit Heater must be no less than 12 inches (305mm) from any combustible. However, in order to insure access to the burner compartment, a minimum distance of 21 inches (533mm) is required. The distance between the flue collector and any combustible must be no less than 6 inches (152mm). Also see AIR FOR COMBUSTION and VENTING sections.

NOTICE: Increasing the clearance distances may be necessary if there is a possibility of distortion or discoloration of adjacent materials.

⚠ WARNING Make certain that the structure to which the heater is to be mounted is capable of safely supporting its weight. Under no circumstances must the gas lines, venting system or the electrical conduit be used to support the heater; or should any other objects (i.e. ladder, person) lean against the heater, gas lines, venting system or electrical conduit for support. Failure to heed these warnings may result in property damage, personal injury or death.

⚠ CAUTION Unit heaters must be hung level from side to side and from front to back; see Figures 1 through 4. Failure to do so will result in poor performance and or premature failure of the unit.

⚠ WARNING Insure that all hardware used in the suspension or each unit heater is more than adequate for the job. Failure to do so may result in extensive property damage, severe personal injury or death!

Refer to Figures 1 through 4, and dimensional data per Table 1 for suspension of units.

Figure 3 - Heater Mounting*

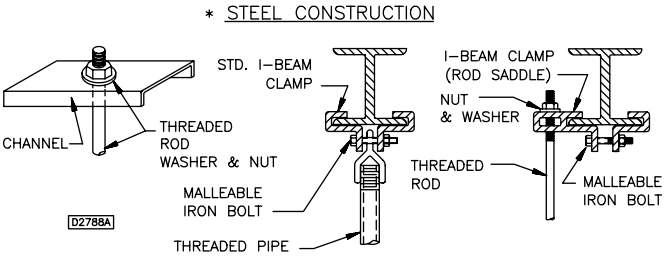

***All hanging hardware and wood is not included with the unit (To be field supplied).**

Figure 4 - Heater Mounting 100/400 MBTU Sizes Unit Sizes

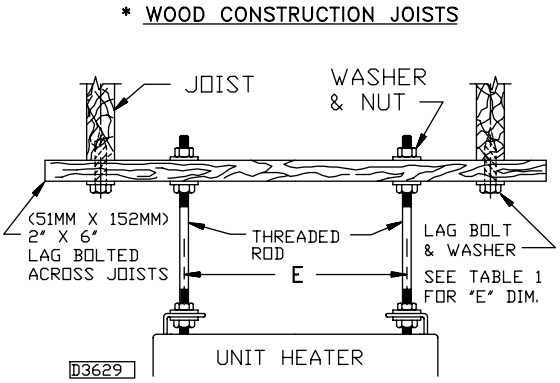

INSTALLATION – GAS SUPPLY PIPING/SIZING

⚠ WARNING To avoid equipment damage or possible personal injury, do not connect gas piping to this unit until a supply line pressure/leak test has been completed. Connecting the unit before completing the pressure/leak test may damage the unit gas valve and result in a fire hazard.

Do not rely on a shut off valve to isolate the unit while conducting gas pressure/leak tests. These valves may not be completely shut off, exposing the unit gas valve to excessive pressure and damage.

PIPE SIZING

To provide adequate gas pressure at the gas unit heater, size the gas piping as follows:

1. Find the cu ft/hr by using the following formula:

$$\text{Cu ft/hr} = \frac{\text{Input Btu/Hr.}}{1{,}000}$$

2. Refer to table 3. Match "Length of Pipe in Feet" with appropriate "Gas Input - Cu Ft/Hr" figure. This figure can then be matched to the pipe size at the end of the column.

Example: It is determined that a 67 foot (20.4m) run of gas pipe is required to connect a 200 MBTU gas unit heater to a 1,000 Btu/cu. ft (0.29 kW) natural gas supply.

$$\frac{200{,}000 \text{ Btu/hr}}{1{,}000 \text{ Btu/cu ft}} = 200 \text{ Cu ft/hr}$$

Using Table 3, a 1 inch pipe is needed.

NOTICE: See General Safety Information section for english/SI (metric) unit conversion factors.

NOTICE: If more than one gas unit heater is to be served by the same piping arrangement, the total cu ft/hr input and length of pipe must be considered.

NOTICE: If the gas unit heater is to be fired with LP gas, see Table 3 or consult the local LP gas dealer for pipe size information.

NOTICE: HEATER INSTALLATION FOR USE WITH PROPANE (BOTTLED) GAS MUST BE MADE BY A QUALIFIED L.P. GAS DEALER OR INSTALLER. HE WILL INSURE THAT PROPER JOINT COMPOUNDS ARE USED FOR MAKING PIPE CONNECTIONS; THAT AIR IS PURGED FROM LINES; THAT A THOROUGH TEST IS MADE FOR LEAKS BEFORE OPERATING HEATER; AND THAT IT IS PROPERLY CONNECTED TO PROPANE GAS SUPPLY SYSTEM.

Before any connection is made to an existing line supplying other gas appliances, contact the local gas company to make certain that the existing line is of adequate size to handle the combined load.

Table 3 - Gas Pipe Size

Maximum Capacity of Pipe in Cubic Feet of Gas per Hour (Cubic Meters per Hour) for Gas Pressures of 0.5 psig (3.5 kPa) or Less, and a Pressure Drop of 0.5 Inch Water Column (124.4 Pa)
(Based on a 0.60 Specific Gravity Gas)

Nominal Iron Pipe Size in.	Internal Dia. in.	Length of Pipe, Feet (meters)													
		10 (3.0)	20 (6.1)	30 (9.1)	40 (12.2)	50 (15.2)	60 (18.3)	70 (21.3)	80 (24.4)	90 (27.4)	100 (30.5)	125 (38.1)	150 (45.7)	175 (53.3)	200 (61.0)
1/2	0.622	175 (4.96)	120 (3.40)	97 (2.75)	82 (2.32)	73 (2.07)	66 (1.87)	61 (1.73)	57 (1.61)	53 (1.50)	50 (1.42)	44 (1.25)	40 (1.13)	37 (1.05)	35 (0.99)
3/4	0.824	360 (10.2)	250 (7.08)	200 (5.66)	170 (4.81)	151 (4.28)	138 (3.91)	125 (3.54)	118 (3.34)	110 (3.11)	103 (2.92)	93 (2.63)	84 (2.38)	77 (2.18)	72 (2.04)
1	1.049	680 (19.3)	465 (13.2)	375 (10.6)	320 (9.06)	285 (8.07)	260 (7.36)	240 (6.80)	220 (6.23)	205 (5.80)	195 (5.52)	175 (4.96)	160 (4.53)	145 (4.11)	135 (3.82)
1 1/4	1.380	1400 (39.6)	950 (26.9)	770 (21.8)	660 (18.7)	580 (16.4)	530 (15.0)	490 (13.9)	460 (13.0)	430 (12.2)	400 (11.3)	360 (10.2)	325 (9.20)	300 (8.50)	280 (7.93)
1 1/2	1.610	2100 (59.5)	1460 (41.3)	1180 (33.4)	990 (28.0)	900 (25.5)	810 (22.9)	750 (21.2)	690 (19.5)	650 (18.4)	620 (17.6)	550 (15.6)	500 (14.2)	460 (13.0)	430 (12.2)
2	2.067	3950 (112)	2750 (77.9)	2200 (62.3)	1900 (53.8)	1680 (47.6)	1520 (43.0)	1400 (39.6)	1300 (36.8)	1220 (34.5)	1150 (32.6)	1020 (28.9)	950 (26.9)	850 (24.1)	800 (22.7)
2 1/2	2.469	6300 (178)	4350 (123)	3520 (99.7)	3000 (85.0)	2650 (75.0)	2400 (68.0)	2250 (63.7)	2050 (58.0)	1950 (55.2)	1850 (52.4)	1650 (46.7)	1500 (42.5)	1370 (38.8)	1280 (36.2)
3	3.068	11000 (311)	7700 (218)	6250 (177)	5300 (150)	4750 (135)	4300 (122)	3900 (110)	3700 (105)	3450 (97.7)	3250 (92.0)	2950 (83.5)	2650 (75.0)	2450 (69.4)	2280 (64.6)
4	4.026	23000 (651)	15800 (447)	12800 (362)	10900 (309)	9700 (275)	8800 (249)	8100 (229)	7500 (212)	7200 (204)	6700 (190)	6000 (170)	5500 (156)	5000 (142)	4600 (130)

1. Determine the required Cu. Ft. / Hr. by dividing the rated heater input by 1000. For SI / Metric measurements: Convert unit Btu. / Hr. to kilowatts. Multiply the unit input (kW) by 0.0965 to determine Cubic Meters / Hour. 2. FOR NATURAL GAS: Select the pipe size directly from the table. 3. FOR PROPANE GAS: Multiply the Cu. Ft. / Hr. value by 0.633; then use the table. 4. Refer to the metric conversion factors listed in General Safety section for more SI unit measurements/conversions.

PIPE INSTALLATION

1. Install the gas piping in accordance with applicable local codes.
2. Check gas supply pressure. Each unit heater must be connected to a manifold pressure and a gas supply capable of supplying its full rated capacity (refer to Table 4). A field LP tank regulator must be used to limit the supply pressure to maximum of 14 inches W.C. (3.5 kPa). All piping should be sized in accordance with the latest edition of ANSI Standard Z223.1 National Fuel Gas Code; in Canada, according to CGA-B149. See Tables 1 and 3 for correct gas supply piping size. If gas pressure is excessive on natural gas applications, install a pressure regulating valve in the line upstream from the main shutoff valve.
3. Adequately support the piping to prevent strain on the gas manifold and controls.
4. To prevent the mixing of moisture with gas, run the take-off piping from the top, or side, of the main.
5. Standard gas unit heaters, optional two-stage units, and hydraulic modulating units are supplied with a combination valve which includes:
   (a) Manual "A" valve (b) Manual "B" valve (c) Solenoid valve (d) Pilot safety (e) Pressure regulator. Pipe directly in to combination valve (see Figure 5).
6. A 1/8" N.P.T. plugged tapping, accessible for test gauge connection, must be installed immediately upstream of the gas supply connection to the appliance.
7. Provide a drip leg in the gas piping near the gas unit heater. A ground joint union and a manual gas shutoff valve should be installed ahead of the unit heater controls to permit servicing. The manual main shutoff valve must be located external to the jacket. See figure 5.
8. Make certain that all connections have been adequately doped and tightened.

⚠ CAUTION Do not overtighten the inlet gas piping into the valve. This may cause stresses that would crack the valve!

NOTICE: Use pipe joint sealant resistant to the action of liquefied petroleum gases regardless of gas conducted.

⚠ WARNING Check all pipe joints for leakage using a soap solution or other approved method. Never use an open flame or severe personal injury or death may occur.

Figure 5 - Pipe Installation, Standard Controls

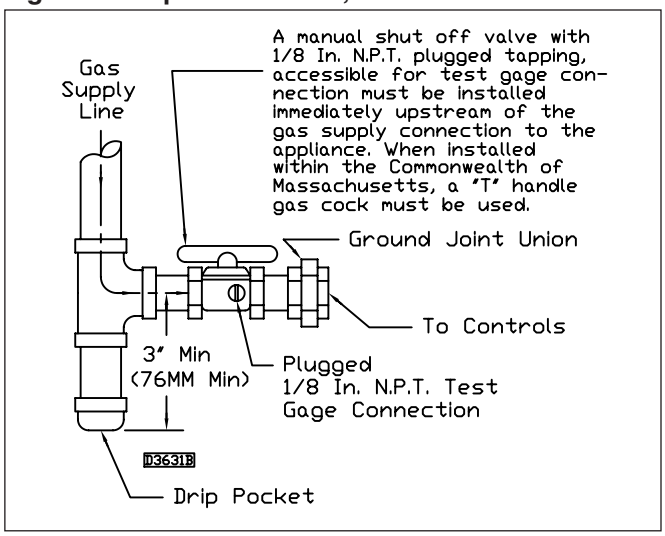

⚠ WARNING Never use an open flame to detect gas leaks. Explosive conditions may exist which would result in personal injury or death.

The appliance and its individual shutoff valve must be disconnected from the gas supply piping system during any pressure testing of that system at test pressures in excess of 1/2 psig (3.5 kPa).

The appliance must be isolated from the gas supply piping system by closing its individual manual shutoff valve during any pressure testing of the gas supply piping system at test pressures equal to or less than 1/2 psig (3.5 kPa).

Table 4 - Gas Piping Requirements

SINGLE STAGE GAS PIPING REQUIREMENTS*

Gas Type	Natural Gas	Propane (LP) Gas
Manifold Pressure	3.5 in. W.C. (0.9 kPa)	10.0 in. W.C. (2.5 kPa)
Supply Inlet Pressure	14.0 in. W.C. Max. (3.5 kPa)	14.0 in. W.C. Max. (3.5 kPa)
	5.0 in. W.C. Min. (1.2 kPa)	11.0 in W.C. Min. (2.7 kPa)

**For single stage application only at normal altitudes.*

TWO STAGE GAS PIPING REQUIREMENTS**

Gas Type	Natural Gas	Propane (LP) Gas
Supply Inlet Pressure	6.5 in. W.C. Min. (1.6 kPa)	11.5 in. W.C. Min. (2.9 kPa)

***For two stage applications only at normal altitudes; two stage applications do not apply to the 30/75 MBH models.*

VENTING

ALL UNIT HEATERS MUST BE VENTED!
All venting installations shall be in accordance with "Part 7, Venting of Equipment of the National Fuel Gas Code, ANSI Z223.1, or applicable provisions of local building codes." See below for Canadian Installations.*

⚠ WARNING CARBON MONOXIDE! Your venting system must not be block by any snow, snow drifts, or any foreign matter. Inspect your venting system to ensure adequate ventilation exists at all times! Failure to heed these warnings could result in Carbon Monoxide Poising (symptoms include grogginess, lethargy, inappropriate tiredness, or flu-like symptoms).

⚠ CAUTION This unit heater is equipped with a blocked vent (spill) shutoff switch.

Before start up, push reset button on blocked vent (spill) shutoff switch.

If the venting system becomes blocked or there is continuous spillage, the vent shutoff switch will shut off the unit heater. Before resetting the switch, check to see if the vent system is blocked; remove any blockage.

To reset the switch (which is located in the upper corner of the draft diverter), push the reset button after the duct furnace has cooled down.

NOTICE: The switch will not reset hot.

Observe the following precautions when venting the unit (refer to Figure 6):

1. Use flue pipe of the same size as the flue connections on the gas unit heater (See Table 1). All heaters should be vented with a UL Listed Type B vent; a factory built chimney or a lined brick and mortar chimney that has been constructed in accordance with the National Building Code.
2. Where two or more gas unit heaters vent into a common flue, the cross sectional area of the common flue must be equal to the largest vent connection, plus 50% of the area of each additional vent connection.
3. Provide as long a vertical run of flue at the gas unit heater as possible. A minimum of five feet (1.5m) of vertical flue is required. The top of the vent pipe should extend at least two feet (0.6m) above the highest point on the roof. Install a weather cap over the vent opening.
4. Slope horizontal runs upward from the gas unit heater at least 1/4-inch per foot (21mm/m). Horizontal runs should not exceed 33% of the vertical height of the vent pipe, or chimney, above the flue pipe connection, up to a maximum length of 10 feet (3m). Horizontal portions of the venting system shall be supported at maximum intervals of four feet (1.22m) to prevent sagging.
5. Use as few elbows as possible.
6. Tape flue pipe joints with fireproof paper or material.
7. Avoid running vent pipe through unheated spaces.
8. When this cannot be avoided, insulate the pipe to prevent the condensation of moisture on the inside walls of the pipe.
9. Do not damper the flue piping. Failure to open such a damper prior to operating the gas unit heater will result in the spillage of flue gas into the occupied space, activating blocked vent (spill) switch. See prior instructions.
10. Avoid installing units in areas under negative pressure due to large exhaust fans or air conditioning. When required, a flue vent fan should be installed in accordance with the instructions included with the fan.
11. This optional draftor/power venter is designed to operate as a Category I venting system – when installed per Installation Instructions to a Category I unit with a draft diverter.
12. Vent connectors serving Category I heaters shall not be connected into any portion of mechanical draft systems operating under positive pressure, such as Category III and IV.

Figure 6

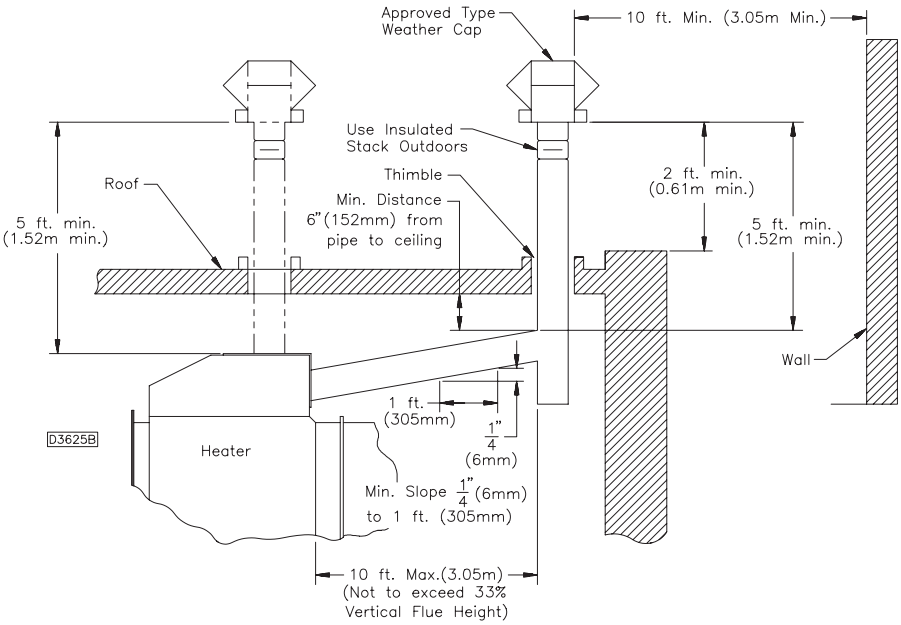

* The following additional instructions apply to Canadian installations in addition to installation and operating instructions:

1. Installation must conform with local building codes, or in absence of local codes, with current CGA-B149.1, Installation Codes for Natural Gas Burning Appliances and Equipment, or CGA-B149.2, Installation Codes for Propane Gas Burning Appliances and Equipment.
2. Any reference to U.S. standards or codes in these instructions are to be ignored and the applicable Canadian standards or codes applied.

ELECTRICAL CONNECTIONS

⚠ WARNING

HAZARDOUS VOLTAGE!
DISCONNECT ALL ELECTRIC POWER INCLUDING REMOTE DISCONNECTS BEFORE SERVICING. Failure to disconnect power before servicing can cause severe personal injury or death.

Standard units are shipped for use on 115 volt, 60 hertz single phase electric power. The motor name-plate and electrical rating on the transformer should be checked before energizing the unit heater electrical system. All external wiring must conform to the latest edition of ANSI/NFPA No. 70, National Electrical Code and applicable current local codes; in Canada, to the Canadian Electrical Code, Part 1 CSA Standard C22.1.

⚠ CAUTION Do not use any tools (i.e. screwdriver, pliers, etc.) across the terminals to check for power. Use a voltmeter.

It is recommended that the electrical power supply to each unit heater be provided by a separate, fused and permanently live electrical circuit. A disconnect switch of suitable electrical rating for each unit heater should be located as close to the gas valve and controls as possible. Each unit heater must be electrically grounded in accordance with the latest edition of the National Electric Code, ANSI/NFPA No. 70 or CSA Standard C22.1. Sample wiring connections are depicted in Figure 7.

THERMOSTAT WIRING AND LOCATION

NOTICE: The thermostat must be mounted on a vertical vibration-free surface free from air currents and in accordance with the furnished instructions.

Mount the thermostat approximately 5 feet (1.5m) above the floor in an area where it will be exposed to a free circulation of average temperature air. Always refer to the thermostat instructions as well as our unit wiring diagram and wire accordingly. Avoid mounting the thermostat in the following locations:

1. Cold areas - Outside walls or areas where drafts may affect the operation of the control.
2. Hot areas - Areas where the sun's rays, radiation, or warm air currents may affect control operation.
3. Dead areas - Areas where air cannot circulate freely, such as behind doors or in corners.

* Thermostat wires tagged “W” and “G” must be connected together except when using a general purpose “SPDT” 24VAC relay and a standard thermostat with subbase, or when using Honeywell T834H-1009 or T834H-1017 thermostats. Also refer to Figure 7 for other wiring connections.

Figure 7 - C1267G

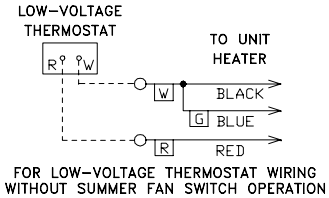

THERMOSTAT HEAT ANTICIPATOR ADJUSTMENTS: The initial heat anticipator setpoint should equal the thermostat's current amperage draw when the unit is firing. This setpoint should be measured for the best results. Use the recommended ranges as a guide. If further information is needed, consult your thermostat manufacturer's instructions.

Recommended Heat Anticipator Setting Ranges:

Gas Ignition Type	25 ft. (7.6m) T'stat Wiring	50 ft. (15.2m) T'stat Wiring
For Natural Vent Units:		
Standing Pilot	0.68 to 0.75 A	0.73 to 0.81 A
Intermittent (Spark)	0.76 to 0.81 A	0.81 to 0.91 A

FAN TIME DELAY CONTROL

Leads from time delay controls are factory wired to the junction box (when ordered as an optional component). The fan control is a time delay relay (approximately 45 seconds ON, 65 seconds OFF). The fan control is rated at 17 amps.

NOTICE: The start-up fan delay must not exceed 90 seconds from a cold start.

IMPORTANT: For all wiring connections, refer to the wiring diagram that your unit is equipped with (either affixed to the side jacket or enclosed in your unit's installation instruction envelope). Should any original wire supplied with the heater have to be replaced, it must be replaced with wiring material having a temperature rating of at least 105°C.

Should any high limit or blocked vent (spill) switch wires have to be replaced, they must be replaced with wiring material having a temperature rating of 200°C minimum.

OPERATION - PROPELLER UNITS WITH STANDING PILOT

EXPLANATION OF CONTROLS (see Figure 8):

1. The unit heater is equipped with a combination gas control valve which provides the following functions.
   a. Manual main gas valve controls the flow of gas to the unit heater.
   b. Pilot gas valve controls flow of gas to the pilot burner.
   c. Pilot safety switch interrupts flow of gas completely if pilot is not lit.
   d. Pressure regulator provides proper and steady gas pressure to the main burners.
   e. 24 volt solenoid valve controls flow of gas to main burners and is operated by the wall thermostat.
2. The limit switch interrupts the flow of electric current to the main gas valve in case the heater becomes overheated.
3. The fan switch delays the operation of the fan until the heater is warmed, then keeps the fan running after the gas has been turned off until the useful heat has been removed. **The startup fan delay must not exceed 90 seconds from a cold start.**
4. The wall thermostat is a temperature sensitive switch which turns the main gas valve ON or OFF to control the temperature of the space being heated. It must be mounted on vibration-free, vertical surface away from air currents, in accordance with the instructions furnished with the thermostat. Not standard equipment. (Also refer to Electrical Section).
5. The E.C.O. (Energy Cut-Off) device (if applicable) is a thermal fuse which opens thermocouple circuit in event excessive temperatures are encountered which are not controlled by high limit.
   If E.C.O. opens, it must be replaced!

⚠WARNING Never use an open flame to detect gas leaks. Explosive conditions may exist which would result in personal injury or death.

START-UP

Open the manual shutoff gas valve to the unit heater and, with the union connection loose, purge air from the gas line. Tighten the union and check for leaks, using a soapy water solution only:

Light the pilot as follows:

1. Close the main and pilot gas supply by depressing and turning gas cock dial to OFF. Refer to Figure 8 for burner component identification.
2. Turn the thermostat to the OFF position or lowest temperature setting on the dial.

⚠WARNING Before attempting to light or relight the pilot, wait five minutes to allow gas which may have accumulated in the burner compartment to escape. Failure to do so could cause the accumulated gas to ignite rapidly, leading to personal injury or death.

3. Turn the gas cock dial to PILOT position.
4. Depress and hold the gas cock or red bottom dial while lighting the pilot burner. Allow the pilot to burn for approximately 30 seconds before releasing. If the pilot does not remain lit, repeat the operation allowing a longer period of time before releasing.
5. If pilot adjustment is required, remove the pilot adjustment cap and adjust the pilot key to obtain proper flame. Replace the cap.

NOTICE: A proper pilot flame is soft steady flame that envelops 3/8-inch to 1/2-inch (9.5 to 12.7 mm) of the thermocouple tip.

6. Turn the gas cock dial to the ON position.
7. Turn the thermostat to the desired position.
8. Check gas input rate (see adjustments)

SHUT-DOWN

1. Turn the valve selector knob to the OFF position.
2. Turn off the electricity.
3. To relight, follow the “START-UP” instructions above.

Figure 8 - Burner Components — Standing Pilot Components

Also refer to Figures 2, 4, 14 and 17 for component locations.

Standing Pilot Parts/Controls

BURNER DRAWER - COMMON PARTS:

1.) Main Burners
2.) Burner Manifold
3.) Air Shutters
4.) Burner Springs
5.) Main Burner Orifice
6.) Transformer/Junction Box
7.) Pliot Tubing

CONTROLS:

8A.) Honeywell VR8200 Gas Valve
8B.) Honeywell VR8300 Gas Valve
8C.) White-Rodgers 36C Gas Valve
9.)* High Limit Switch
9A.)* E.C.O. (Not Shown) (White Rodgers Valve Only)
10.) Pilot Burner Assembly
11.)† Blocked Vent (Spill) Switch

*These safety devices are located on the rear header plate of heat exchanger (inlet air side).
†This safety device access is located in the upper right corner of the right side jacket panel.

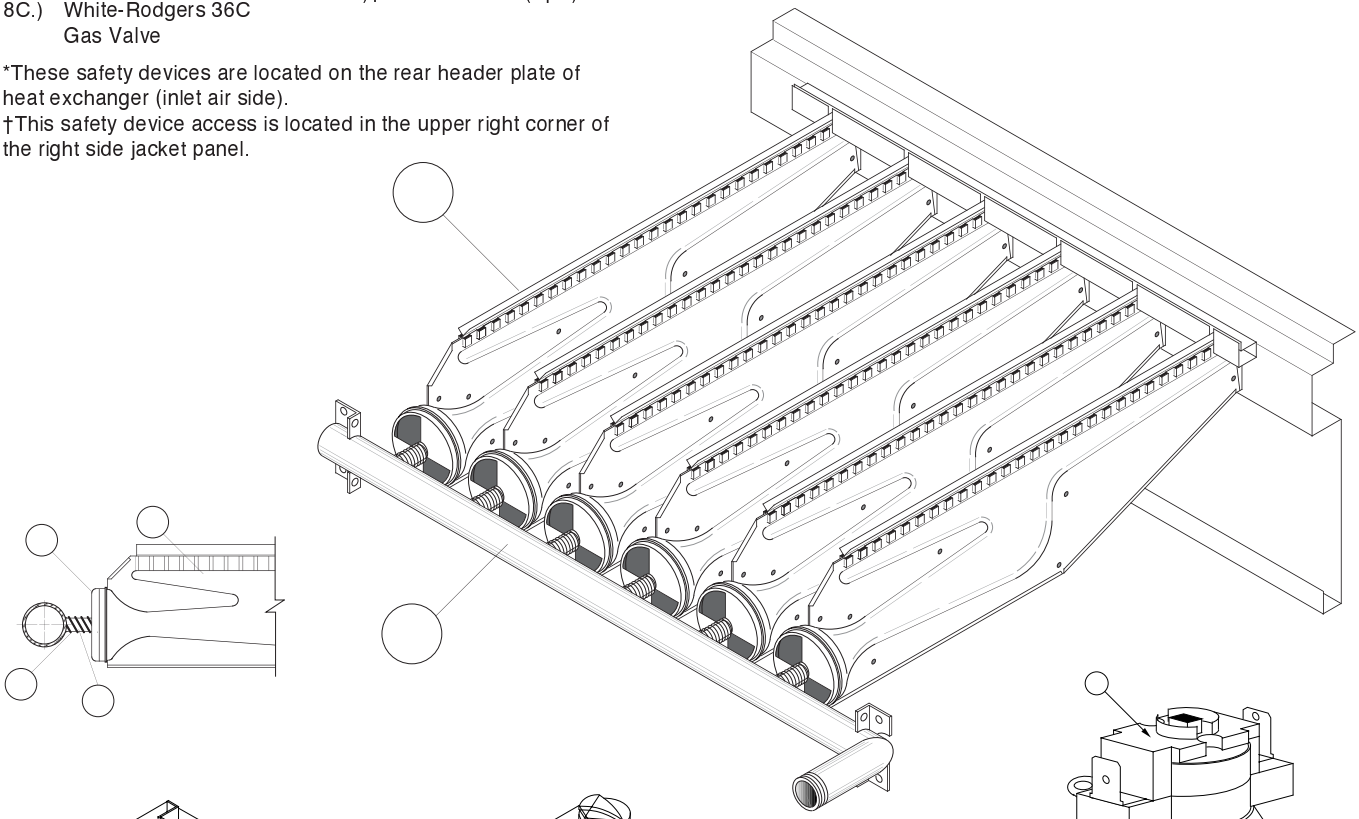

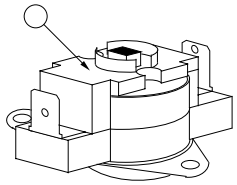

Blocked Vent (Spill) Switch

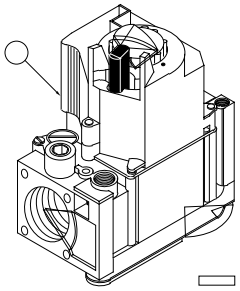

Honeywell Standing Pilot Gas Valve VR8200

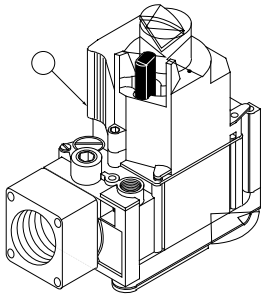

Honeywell Standing Pilot Gas Valve VR8300

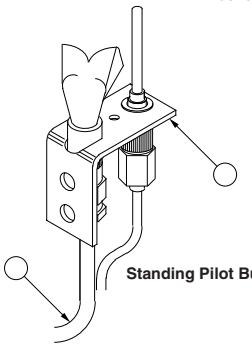

Standing Pilot Burner Assembly

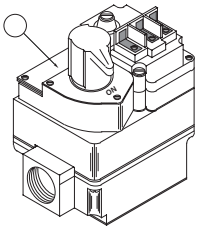

White Rodgers Standing Pilot Gas Valve 36C

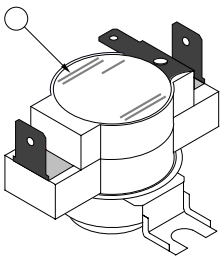

Hi Limit

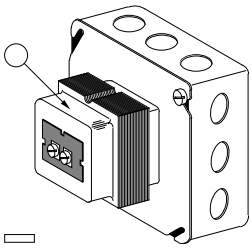

Transformer

OPERATION - PROPELLER UNITS WITH OPTIONAL INTERMITTENT (SPARK) PILOT IGNITION

EXPLANATION OF CONTROLS (see Figure 9):

1. The unit heater is equipped with a dual automatic gas valve and electric ignition device (separate from the gas valve on some models) which provide the following functions:
   a. Pilot solenoid valve is energized and pilot is electrically ignited when thermostat calls for heat.
   b. Electronic circuitry proves that pilot flame is established, then energizes main gas solenoid valve.
   c. When thermostat is satisfied, main gas solenoid valve and pilot solenoid valve are de-energized, stopping all flow of gas.
   d. Pilot solenoid valve also functions as a main gas valve to provide redundancy.
   e. Pressure regulator provides proper and steady gas pressure to the main burners.
   f. Manual shutoff valve for service and long term shut-down. (Separate from the automatic valve on some models.)
2. The limit switch interrupts the flow of electric current to the main gas valve in case the heater becomes overheated.
3. The fan switch delays the operation of the fan until the heater is warmed, then keeps the fan running after the gas has been turned off until the useful heat has been removed. **The startup fan delay must not exceed 90 seconds from a cold start.**
4. The wall thermostat is a temperature sensitive switch which turns the main gas valve ON or OFF to control the temperature of the space being heated. It must be mounted on a vibration free, vertical surface away from air currents, in accordance with the instructions furnished with the thermostat (also refer to Electrical Section).

START-UP

1. Open the manual valve supplying gas to the unit heater, and with the union connection loose, purge air from the gas line. Tighten the union and check for gas leaks, using a soapy water solution only.

⚠WARNING Never use an open flame to detect gas leaks. Explosive conditions may exist which could result in personal injury or death.

⚠WARNING Before attempting to light or relight the pilot, wait five minutes to allow gas which may have accumulated in the burner compartment to escape. Failure to do so could cause the accumulated gas to ignite rapidly, leading to personal injury or death.

2. Open the manual valve on the unit heater.
3. Turn on electrical power.
4. The unit should be under the control of the thermostat. Turn the thermostat to the highest point and determine that the pilot and main burners ignite. Turn the thermostat to the lowest point and determine that the pilot and main burners are extinguished.
5. If pilot adjustment is required, remove the pilot adjustment seal cap and adjust the pilot screw to obtain proper flame. Clockwise rotation decreases pilot flame size. Replace the cap.
6. Turn the thermostat to the desired position.

SHUT DOWN

1. Turn the valve selector knob to the “OFF” position.
2. Turn off the electricity.
3. To relight, follow the “start-up” instructions.

See Figure 9 for parts/identification.

Figure 9 - Burner Components — Intermittent Pilot Ignition

Also refer to Figures 1A, 12, 13 and 14 for component locations.

BURNER DRAWER COMMON PARTS:

1.) Main Burners
2.) Burner Manifold
3.) Air Shutters
4.) Burner Springs
5.) Main Burner Orifice
6.) Transformer
7.) Pilot Tubing

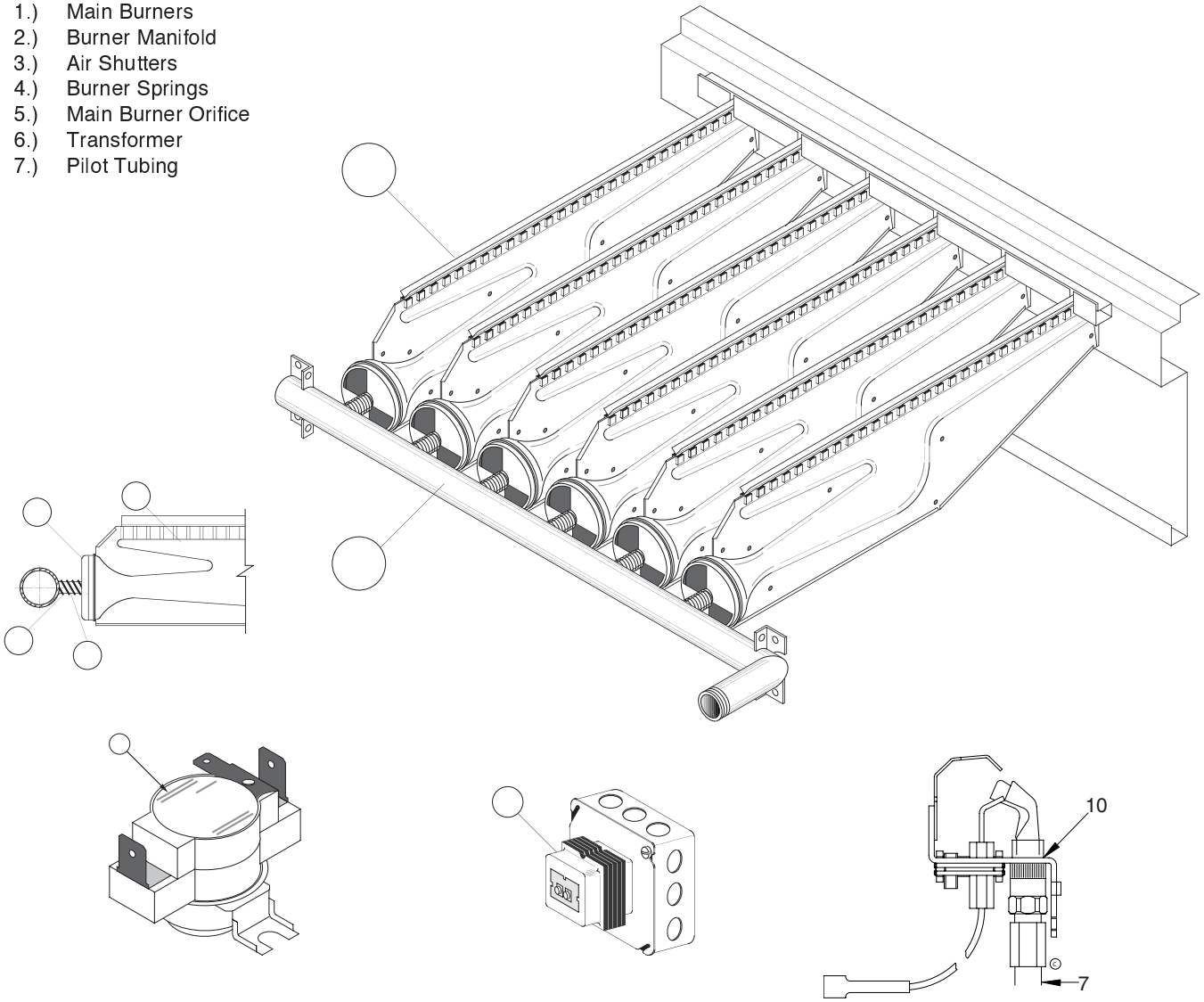

CONTROLS:

8A.) Main Gas Valve (Honeywell)
8B.) Main Gas Valve (White Rodgers)
9. Honeywell S8600 Ignitor
10. Honeywell Pilot Burner
13.)* High Limit
14.)† Blocked Vent (Spill) Switch

*This safety device is located on the rear header plate of the heat exchanger (air inlet side).

†This safety device is located in the upper right corner of the right jacket panel.

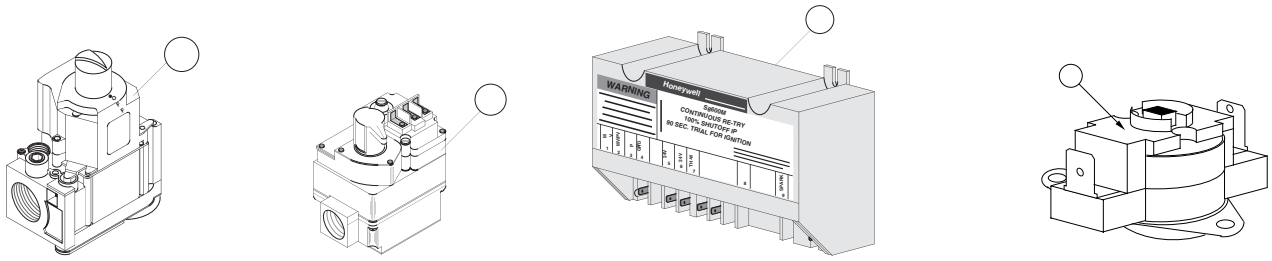

GAS INPUT RATE

⚠ CAUTION Never overfire the unit heater, as this may cause unsatisfactory operation or shorten the life of the heater.

Check the gas input rate as follows (Refer to general safety section for metric conversions/SI units):

1. Turn off all gas appliances that use gas through the same meter as the unit heater.
2. Turn gas on to the unit heater.
3. Clock the time in seconds required to burn one cubic foot of gas by checking the gas meter.
4. Insert the time required to burn one cubic foot of gas into the following formula and compute the input rate.

$$\frac{3600\ (\text{Sec. Per Hr.}) \times \text{Btu/Cu. Ft}}{\text{Time (Sec.)}} = \text{Input Rate}$$

For example, assume the Btu content of one cubic foot of gas equalled 1000 and that it takes 18 seconds to burn one cubic foot of gas.

$$\frac{3600 \times 1000}{18} = 200{,}000$$

NOTICE: If the computation exceeds or is less than 95 percent of the gas Btu/hr. input rating (see Specifications), adjust the gas pressure.

Adjust the gas pressure as follows:

1. NATURAL GAS: Best results are obtained when the unit heater is operating at its full input rating with the manifold pressure of 3.5 inches W.C. (0.9 kPa). Adjustment of the pressure regulator is not normally necessary since it is preset at the factory.

However, field adjustment may be made as follows:

   a. Attach manometer at pressure tap plug adjacent to the control outlet.
   b. Remove regulator adjustment screw cap, located on combination gas valve.
   c. With a small screwdriver, rotate the adjustment screw counterclockwise to decrease or clockwise to increase pressure. Do not force beyond stop limits.
   d. Replace regulator adjustment screw cap.

2. PROPANE GAS: An exact manifold pressure of 10.0 inches WC (2.5 kPa) must be maintained for proper operation of the unit heater. If the unit is equipped with a pressure regulator on the combination gas valve, follow steps “a” through “d” above. If the unit is not so equipped, the propane gas supply system pressure must be regulated to attain this manifold operating pressure.

Table 5 - MAIN BURNER ORIFICE SCHEDULE*

* INPUT IN 1000 BTU	TYPE OF GAS	NATURAL	PROPANE	NO. OF BURNER ORIFICES
	HEATING VALUE	1075 BTU/Ft^3 (40.1 MJ/m^3)	2500 BTU/Ft^3 (93.1 MJ/m^3)	
	MANIFOLD PRESSURE	3.5" W.C. (0.9 kPA)	10" W.C. (2.5 kPA)	
30	FT ^{3}/HR	28	12	2
	ORIFICE DRILL	49	57	
45	FT ^{3}/HR	42	18	3
	ORIFICE DRILL	49	57	
60	FT ^{3}/HR	56	24	4
	ORIFICE DRILL	49	57	
75	FT ^{3}/HR	70	30	5
	ORIFICE DRILL	49	57	
100	FT ^{3}/HR	96	40	4
	ORIFICE DRILL	42	54	
125	FT ^{3}/HR	120	50	5
	ORIFICE DRILL	42	54	
150	FT ^{3}/HR	140	60	6
	ORIFICE DRILL	42	54	
175	FT ^{3}/HR	163	70	7
	ORIFICE DRILL	42	54	
200	FT ^{3}/HR	186	80	8
	ORIFICE DRILL	42	54	
225	FT ^{3}/HR	210	90	9
	ORIFICE DRILL	42	54	
250	FT ^{3}/HR	233	100	10
	ORIFICE DRILL	42	54	
300	FT ^{3}/HR	280	120	12
	ORIFICE DRILL	42	54	
350	FT ^{3}/HR	326	140	14
	ORIFICE DRILL	42	54	
400	FT ^{3}/HR	372	160	16
	ORIFICE DRILL	42	54	

* This schedule is for units operating at normal altitudes of 2000 ft. (610m) or less. SPECIAL ORIFICES ARE REQUIRED FOR INSTALLATIONS ABOVE 2000 FEET (610M).

When installed in Canada, any references to deration at altitudes in excess of 2000 feet (610m) are to be ignored. At altitudes of 2000 to 4500 feet (610 to 1372m), the unit heaters must be orificed to 90% of the normal altitude rating, and be so marked in accordance with the CSA certification.

PRIMARY AIR SHUTTER ADJUSTMENT

After the unit has been operating for at least 15 minutes, adjust the primary air flow to the burners. Turn the friction-locked, manually-rotated air shutters clockwise to close, or counterclockwise to open.

For correct air adjustment, close the air shutter until yellow tips in the flame appear. Then open the air shutter to the point just beyond the position where yellow tipping disappears. Refer to Figure 10.

NOTICE: There may be momentary and spasmodic orange flashes in the flame. This is caused by the burning of airborne dust particles, and not to be confused with the yellow tipping, which is a stable or permanent situation when there is insufficient primary air.

Figure 10 - Main Burner Flames

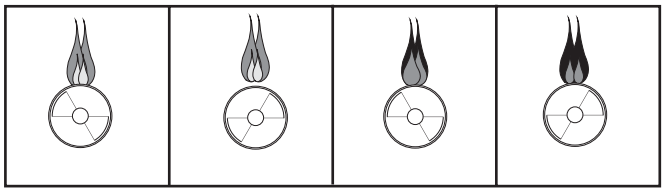

PILOT ADJUSTMENT

1. Remove the pilot adjustment cap.
2. Adjust the pilot screw to provide a properly sized flame.
3. A proper pilot flame is a soft steady flame that envelops 3/8 to 1/2-inch (9.5 to 12.7mm) of the flame sensor.
4. Replace the pilot adjustment cap.

MANIFOLD PRESSURE ADJUSTMENT

If the manifold pressure requires minor adjustment, remove the cap from the pressure regulator and turn the adjustment screw clockwise to increase the pressure, or counterclockwise to decrease the pressure. The adjusted manifold pressure should not vary more than 10% from the pressures specified in Table 4.

MAINTENANCE

PERIODIC SERVICE

⚠WARNING Open all disconnect switches and secure in that position before servicing unit. Failure to do so may result in personal injury or death from electrical shock.

⚠WARNING Gas tightness of the safety shut-off valves must be checked on at least an annual basis.

To check gas tightness of the safety shut-off valves, turn off the manual valve upstream of the appliance combination control. Remove the 1/8 inch pipe plug on the inlet side of the combination control and connect a manometer to that tapping. Turn the manual valve on to apply pressure to the combination control. Note the pressure reading on the manometer, then turn the valve off. A loss of pressure indicates a leak. If a leak is detected, use a soap solution to check all threaded connections. If no leak is found, combination control is faulty and must be replaced before putting appliance back in service.

Should maintenance be required, perform the following inspection and service routine:

1. Inspect the area near the unit to be sure that there is no combustible material located within the minimum clearance requirements listed (see “Installation” section of this manual).

⚠WARNING Under no circumstances should combustible material be located within the clearances specified in this manual. Failure to provide proper clearance could result in personal injury or equipment damage from fire.

2. Turn off the manual gas valve and electrical power to the gas unit heater.
3. To clean or replace the main burners, remove the bottom panel, and compress the spring by moving the burner toward the manifold. Slide the opposite end of the burner downward from the locating slot while retaining spring is still compressed. Pull the burners away from the heat.
4. With the burners removed, gently wire brush the inside surfaces of the heat exchanger.
5. Remove any dirt, dust, or other foreign matter from the burners using a wire brush and/or compressed air. Ensure that all parts are unobstructed. Inspect and clean pilot burner if necessary.
6. Reassemble the gas unit heater by replacing all parts in reverse order.
7. Complete the appropriate unit start-up procedure as given in the “Operation” section of this manual (see lighting instruction plate attached to the unit).
8. Check the burner adjustment. See the “Primary Air Shutter Adjustment” section of this manual.
9. Check all gas control valves and pipe connections for leaks.
10. Check the operation of the automatic gas valve by lowering the setting of the thermostat, stopping the operation of the gas unit heater. The gas valve should close tightly, completely extinguishing the flame on the main burners.
11. Inspect and service the fan section of the unit. To maintain efficient air flow, inspect and clean the fan blades and guard to prevent buildup of foriegn matter.
12. Check and test the operational functions of all safety devices supplied with your unit.
13. Check lubrication instructions on the motor. If oiling is required, add 3 to 4 drops of electric motor oil as follows:
    a. Light Duty - After 3 years or 25,000 hours of operation.
    b. Average Duty - Annually after 3 years or 8,000 hours of operation.
    c. Heavy Duty - Annually after 1 year or at least every 1500 hours of operation.

⚠CAUTION Never over oil the motor or premature failure may occur!

IDENTIFICATION OF PARTS†
PROPELLER UNIT HEATERS

Figure 11
Propeller Parts

P 14 115/1/60 MOTOR
P 15 FAN GUARD
P 16 FAN BLADE
P 17 HARDWARE

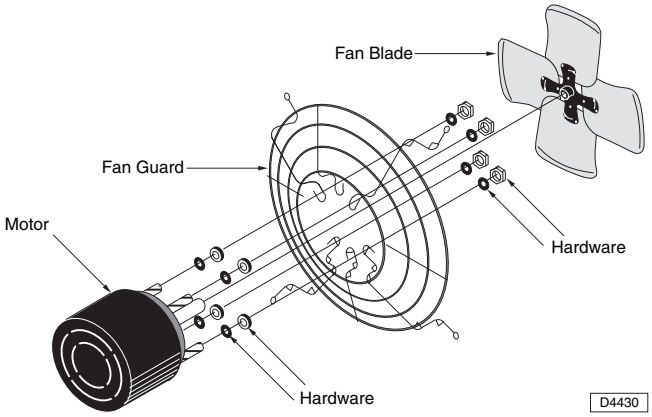

Figure 12

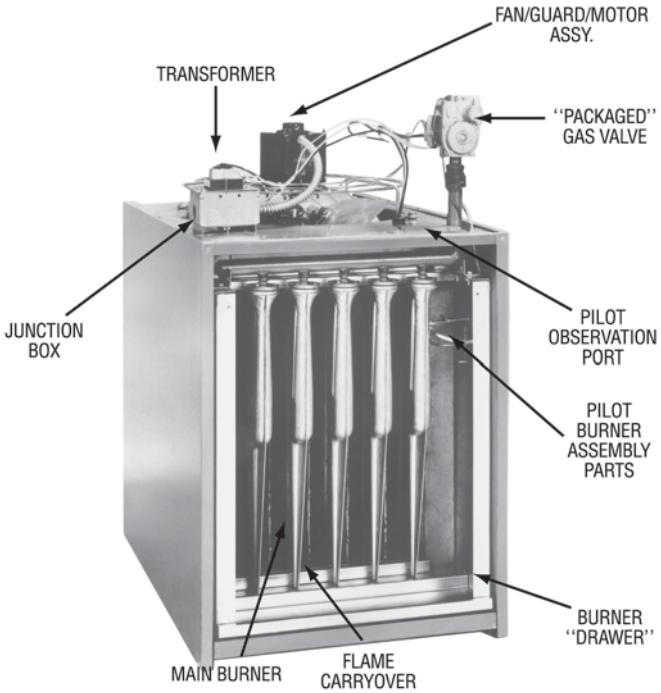

Figure 13
Internal Furnace Components

1. HEAT EXCHANGER
2. DRAFT DIVERTER
3. BURNER DRAWER
4. BLOCKED VENT (SPILL) SWITCH LOCATION

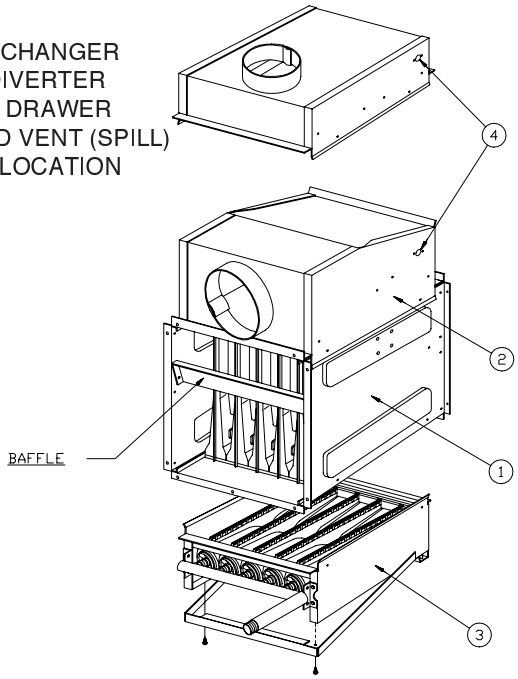

*(225-400 unit sizes only require a baffle.)

Figure 14
Burner Assy' Parts

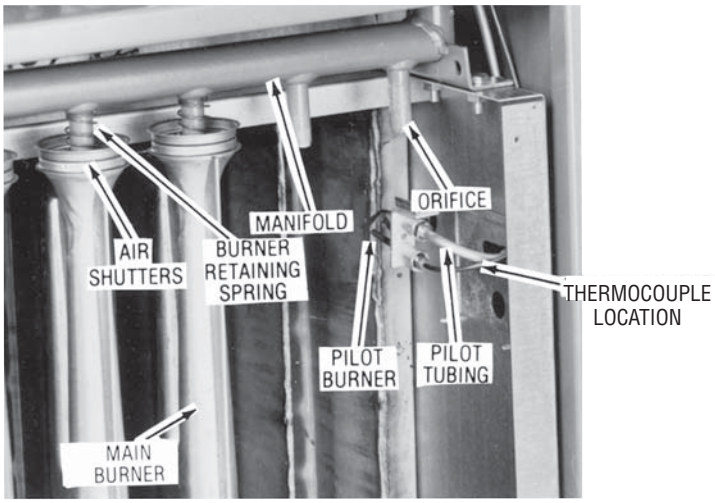

†Additional components are identified throughout this manual.

Troubleshooting Guide — TABLE 6

SYMPTOMS	POSSIBLE CAUSE(S)	CORRECTIVE ACTION
A. Flame lifting from burner ports.	1. Pressure regulator set too high. 2. Defective Regulator. 3. Burner orifice too large.	1. Reset manifold pressure. Refer to "Operation". 2. Replace regulator section of combination gas valve or complete valve. 3. Check with local gas supplier for proper orifice size and replace. Refer to "Operation".
B. Flame pops back.	1. Excessive primary air. 2. Burner orifice too small.	1. Close air shutter. Refer to "Operation". 2. Check with local gas supplier for proper orifice size and replace. Refer to "Operation".
C. Noisy flame.	1. Too much primary air. 2. Noisy pilot 3. Irregular orifice causing whistle or resonance. 4. Excessive gas input.	1. Close air shutter. 2. Reduce pilot gas. Refer to "Operation". 3. Replace orifice. 4. Reset manifold pressure. Refer to "Operation"; Replace regulator section of combination gas valve or complete valve; or Check with local gas supplier for proper orifice size and replace. Refer to "Operation".
D. Yellow tip flame (some yellow tipping on propane gas is permissible).	1. Insufficient primary air. 2. Clogged main burner ports. 3. Misaligned orifices. 4. Clogged draft hood. 5. Air shutter linted. 6. Insufficient combustion air.	1. Open air shutters. Refer to "Operation". 2. Clean main burner ports. 3. Replace manifold assembly. 4. Clean draft hood. 5. Check for dust or lint at air mixer opening and around the air shutter. 6. Clean combustion air inlet openings in bottom panel, see "Installation".
E. Floating flame.	1. Blocked venting. 2. Insufficient combustion air. 3. Blocked heat exchanger. 4. Air leak into combustion chamber or draft hood.	1. Clean flue. Refer to "Installation". 2. Clean combustion air inlet openings in bottom panel, see "Installation". 3. Clean heat exchanger. 4. Determine cause and repair accordingly.
F. Gas Odor.	**1. Shut off gas supply immediately!** 2. Blocked heat exchanger/venting. 3. Drafts around heater. 4. Negative Pressure in building. 5. Blocked draft hood.	**1. Inspect all gas piping and repair.** 2. Clean heat exchanger/flue. 3. Eliminate drafts. Refer to "Installation". 4. See "Installation". 5. Clean draft hood.
G. Delayed ignition.	1. Excessive primary air. 2. Main burner ports clogged near pilot. 3. Pressure regulator set too low. 4. Pilot decreases in size when main burners come on. 5. Pilot flame too small. 6. Drafts around heater. 7. Improper venting.	1. Close air shutter. Refer to "Operation". 2. Clean main burner ports. 3. Reset manifold pressure. Refer to "Operation". 4. Supply piping is inadequately sized. Refer to "Installation". 5. Clean pilot orifice. Refer to "Operation". 6. Eliminate drafts. Refer to "Installation". 7. Refer to "Installation".
H. Failure to ignite.	1. Main gas off. 2. Lack of power at unit. 3. Thermostat not calling for heat. 4. Defective limit switch. 5. Improper thermostat or transformer wiring at gas valve.	1. Open all manual gas valves. 2. Replace fuse or turn on power supply. 3. Turn up thermostat 4. Check limit switch with continuity tester. If open, replace limit switch. 5. Check wiring per diagrams.

Troubleshooting Guide

SYMPTOMS	POSSIBLE CAUSE(S)	CORRECTIVE ACTION
	6. Tripped block vent (spill) switch. 7. Defective gas valve. 8. Defective thermostat 9. Defective transformer. 10. Loose wiring. 11. Defective ignition control.	6. Check blocked vent (spill) switch and reset. See venting. 7. Replace gas valve. 8. Check thermostat and replace if defective. 9. Be sure 115 volts is supplied to the transformer primary, then check for 24 volts at secondary terminal before replacing. 10. Check and tighten all wiring connections per diagrams. 11. Replace, if necessary. Also see W, X & Y symptoms.
J. Condensation of water vapor.	1. Improper venting.	1. Refer to "Installation, Venting".
K. Burner won't turn off.	1. Poor thermostat location. 2. Defective thermostat 3. Improper thermostat or transformer wiring at gas valve. 4. Short circuit. 5. Defective or sticking gas valve. 6. Excessive gas supply pressure.	1. Relocate thermostat away from drafts. 2. Replace thermostat. 3. Check wiring per diagrams. 4. Check operation at valve. Look for short (such as staples piercing thermostat wiring), and correct. 5. Replace gas valve. 6. Refer to "Operation".
L. Rapid burner cycling.	1. Loose electrical connections at gas valve or thermostat. 2. Excessive thermostat heat anticipator. 3. Unit cycling on high limit. 4. Poor thermostat location. 5. Draft on Pilot. 6. Defective ignitor control (if applicable). 7. Unit cycling on high limit. 8. Defective high limit switch.	1. Tighten all electrical connections. 2. Adjust thermostat heat anticipator for longer cycles. Refer to "Operation". 3. Check for proper air supply across heat exchanger. 4. Relocate thermostat. (Do not mount thermostat on unit). 5. Eliminate drafts. Refer to Installation. 6. Replace ignitor. 7. Check for proper air supply across heat exchanger. 8. Jumper limit switch terminals 1 and 2. If burner operates normally, replace switch.
M. Noisy	1. Fan blades loose. 2. Fan blades dirty. 3. Vibration isolators deteriorated. 4. Bearings are dry.	1. Replace or tighten. 2. Clean fan wheel. 3. Replace vibration isolators. 4. Oil bearings on fan motor. (Refer to label on motor).
N. Pilot will not light or will not stay lit.	1. Main gas off. 2. Pilot adjustment screw turned too low on combination/automatic main gas valve. 3. Air in gas line. 4. Incorrect lighting procedure. 5. Dirt in pilot orifice. 6. Extremely high or low gas pressure. 7. Open E.C.O. device (if applicable). 8. Faulty connection in E.C.O. circuit (if applicable).	1. Open all manual gas valves. 2. Increase size of pilot flame. Refer to "Operation". 3. Purge air from gas supply. 4. Follow lighting instruction label adjacent to gas valve. 5. Remove pilot orifice. Clean with compressed air or solvent. (Do not ream). 6. Refer to "Operation". 7. Determine and correct cause of overheat condition. Replace E.C.O. device. 8. Clean and tighten push-on-connections in E.C.O. circuit.

Troubleshooting Guide

SYMPTOMS	POSSIBLE CAUSE(S)	CORRECTIVE ACTION
	9. Defective thermocouple (standing pilot units only). 10. Drafts around unit. 11. Pilot valve not opening (faulty wiring). 12. No spark (if applicable) (faulty wiring). 13. Defective gas valve.	9. Check thermocouple connection, and replace if defective. 10. Eliminate drafts. Refer to "Installation". 11. Inspect and correct all wiring. 12. Inspect and correct ignition system wiring. See symptoms W,X,& Y. 13 Replace.
O. Fan will not run.	1. Loose wiring. 2. Defective motor overload protector or defective motor. 3. Defective fan switch.	1. Check and tighten all wiring connections per diagrams. Thermostat wires tagged "W" and "G" must be connected together (unless special thermostats are used; if so, see thermostat wiring diagram). See electrical connections. 2. Replace motor. 3. Check for 24V across H terminals on fan time delay switch. If 24V is present, jumper terminals numbered 1 and 3. If motor runs, the fan switch is defective and must be replaced. If 24V is not present, check wiring per diagrams.
P. Fan motor turns on and off while burner is operating.	1. Fan switch heater element improperly wired. 2. Defective fan switch. 3. Motor overload protector cycling on and off. 4. Motor not properly oiled.	1. Be sure fan switch heater terminals are connected per diagrams. 2. Replace fan switch. 3. Check motor amps against motor name plate rating, check voltage, replace fan motor if defective. 4. Refer to label on motor.
Q. Fan motor will not stop.	1. Improperly wired fan control. 2. Main burners not lighting while thermostat calls for heat. 3. Defective fan switch.	1. Check all wiring. 2. Refer to H & N symptoms. 3. Replace fan switch.
R. Not enough heat.	1. Incorrect gas input. 2. Heater undersized. 3. Thermostat malfunction. 4. Heater cycling on limit control.	1. Refer to "Operation". 2. This is especially true when the heated space is enlarged. Have the heat loss calculated and compare to the heater output (80% of input). Your gas supplier or installer can furnish this information. If heater is undersized, add additional heaters. 3. Replace thermostat. 4. There should be NO ducts attached to the front of this heater. Check air movement through heat exchanger. Check voltage to fan motor. Clean fan blade and heat exchanger and oil fan motor.
T. Too much heat.	1. Thermostat malfunction. 2. Heater runs continuously.	1. Replace thermostat. 2. Check wiring per diagrams; Check operation at valve. Look for short (such as staples piercing thermostat wiring), and correct; Replace gas valve; Refer to "Operation".
U. Cold air is delivered on start up.	1. Fan switch heater element improperly wired.	1. Be sure fan switch heater terminals are connected per diagrams.

Troubleshooting Guide

SYMPTOMS	POSSIBLE CAUSE(S)	CORRECTIVE ACTION
V. Cold air is delivered during heater operation.	1. Incorrect manifold pressure or input. 2. Voltage to unit too high. 3. Air through put too high.	1. Refer to "Operation". 2. Check motor voltage with fan running. Should be 115 volts AC. 3. Refer to "Operation".
W. NO Spark (if applicable)	1. Thermostat not calling for heat. 2. No low voltage. 3. Spark gap closed or too wide. 4. Broken or cracked ceramic on spark electrode.	1. Close thermostat contacts. 2. Check for 24V across 24V terminals of S8600. 3. Set gap to 0.1". 4. Replace pilot assembly.
X. Spark present but pilot does not light. (If spark is applicable).	1. Loose S8600 connections. 2. Improper gas pressure. 3. Is spark in pilot gas stream? 4. No pilot gas — do not use match to test - presence of gas is easily detected by the odor.	1. Check all connections, term. PV feeds 24V to pilot valve. 2. Check pressure — pressure that is either too high or too low may cause a problem. 3. Spark should arc from electrode. 4. Check pilot line for kinks. Insure there are no drafts.
Y. Pilot lights — Main valve does not energize. (Spark units only).	1. Loose S8600 connections. 2. Cracked or broken sensor ceramic. 3. Check sensor/spark lead for continuity. 4. Measure 24 volts from term. MV to term. MV/PV.	1. Check connections-term. MV feeds main valve. 2. Replace pilot assembly. 3. Replace if needed. 4. If present, replace main valve; if not, replace S8600 Igniter.
Z. Hi-Limit switch tripping.	1. Vertical run of flue is too short. (standard units only as Category I). 2. Unit is overfiring. 3. Air flow too low 4. Defective switch.	1. Lengthen vertical run of flue pipe (see venting). 2. Manifold pressure is to high; adjust. Burner orifices may be too large: verify/replace if req'd. 3. Increase air flow; check fan size. Check for proper voltage. 4. Replace.

HOW TO ORDER REPLACEMENT PARTS

Please send the following information to your local representative; If further assistance is needed, contact the manufacturer's customer service department.

- Model number
- Serial Number (if any)
- Part Description and Number as shown in the Replacement Parts Catalog

---

LIMITED WARRANTY

Gas–Fired Unit Heaters

GAS FIRED UNIT HEATERS

The “Manufacturer” warrants to the original owner at original installation site that the Gas–Fired Unit Heaters (the “Product”) will be free from defects in material or workmanship for a period not to exceed one (1) year from startup or eighteen (18) months from the date of shipment from the factory, whichever occurs first. The Manufacturer further warrants that the complete heat exchanger, draft hood assembly, and burner will be free from defects in material and workmanship for a period of ten (10) years from the date of manufacture. If upon examination by the Manufacturer the Product is shown to have a defect in material or workmanship during the warranty period, the Manufacturer will repair or replace, at its option, that part of the Product which is shown to be defective.

This limited warranty does not apply:

(a) if the Product has been subjected to misuse or neglect, has been accidentally or intentionally damaged, has not been installed, maintained or operated in accordance with the furnished written instructions, or has been altered or modified in any way.
(b) to any expenses, including labor or material, incurred during removal or reinstallation of the defective Product or parts thereof.
(c) to any damage due to corrosion by chemicals (including halogenated hydrocarbons) precipitated in the air.
(d) to any workmanship of the installer of the Product.

This limited warranty is conditional upon:

(a) shipment to the Manufacturer of that part of the Product thought to be defective. Goods can only be returned with prior written approval of the Manufacturer. All returns must be freight prepaid.
(b) determination in the reasonable opinion of the Manufacturer that there exists a defect in material or workmanship.

Repair or replacement of any part under this Limited Warranty shall not extend the duration of the warranty with respect to such repaired or replaced part beyond the stated warranty period.

THIS LIMITED WARRANTY IS IN LIEU OF ALL OTHER WARRANTIES, EITHER EXPRESS OR IMPLIED, AND ALL SUCH OTHER WARRANTIES, INCLUDING WITHOUT LIMITATION IMPLIED WARRANTIES OF MERCHANTABILITY OR FITNESS FOR A PARTICULAR PURPOSE, ARE HEREBY DISCLAIMED AND EXCLUDED FROM THIS LIMITED WARRANTY. IN NO EVENT SHALL THE MANUFACTURER BE LIABLE IN ANY WAY FOR ANY CONSEQUENTIAL, SPECIAL, OR INCIDENTAL DAMAGES OF ANY NATURE WHATSOEVER, OR FOR ANY AMOUNTS IN EXCESS OF THE SELLING PRICE OF THE PRODUCT OR ANY PARTS THEREOF FOUND TO BE DEFECTIVE. THIS LIMITED WARRANTY GIVES THE ORIGINAL OWNER OF THE PRODUCT SPECIFIC LEGAL RIGHTS. YOU MAY ALSO HAVE OTHER RIGHTS WHICH MAY VARY BY EACH JURISDICTION.

GAS EQUIPMENT START-UP

Customer _____ **Job Name & Number** _____

PRE-INSPECTION INFORMATION
With power and gas off.

Type of Equip: Unit Heater

Serial Number _____ Model Number _____

Name Plate Voltage: _____ Name Plate Amperage: _____

Type of Gas: Natural LP Tank Capacity _____ lbs. Rating: _____ BTU @ ____ °F
_____ kg _____ kw @ ____ °C

- ❒ Are all panels, doors, vent caps in place?
- ❒ Has the unit suffered any external damage? Damage _____
- ❒ Does the gas piping and electric wiring appear to be installed in a professional manner?
- ❒ Has the gas and electric been inspected by the local authority having jurisdiction?
- ❒ Is the gas supply properly sized for the equipment?
- ❒ Were the installation instructions followed when the equipment was installed?
- ❒ Have all field installed controls been installed?
- ❒ Do you understand all the controls on this equipment? ***If not, contact your wholesaler or rep.***
  (DO NOT START this equipment unless you fully understand the controls.)

GENERAL
With power and gas off.

- ❒ Make certain all packing has been removed.
- ❒ Tighten all electrical terminals and connections.
- ❒ Check damper linkages for tightness.
- ❒ Check all fans & blowers for free movement.
- ❒ Check all controls for proper settings.
- ❒ Check all set screws on blowers and bearings.
- ❒ Check belt tightness.

BLOWER
With power on and gas off.

- ❒ Check voltage L1 _____ L2 _____ L3 _____
- ❒ Check rotation of main blower.
- ❒ Check motor amps L1 _____ L2 _____ L3 _____
- ❒ Blower RPM _____
- ❒ Check air filters. *(Record quantity & size.)*

GAS HEATING
With power and gas on.

- ❒ Inlet gas pressure. ____ in. W.C. or ____ kPa
- ❒ Pilot & main burner ignition.
- ❒ Manifold gas pressure. ____ in. W.C. or ____ kPa
- ❒ Cycle on HIGH LIMIT.
- ❒ Cycle firestat and/or freezestat.
- ❒ Check electronic modulation. Set at: _____
- ❒ Check mechanical modulation. Set at: _____
- ❒ Cycle and check all other controls not listed.
- ❒ Check operation of remote panel.
- ❒ Entering air temp. _____ °F or ____ °C
- ❒ Discharge air temp. (high fire) ____ °F. or ____ °C
- ❒ External static pressure _____ in. W.C.
- ❒ Cycle by thermostat or operating control.

Remarks: _____

_____

_____